Dewgong
(Pokemon)



FREE papercraft
by
Antyyy


Antyyy's Papercrafts
Everything ANIME made out of paper!

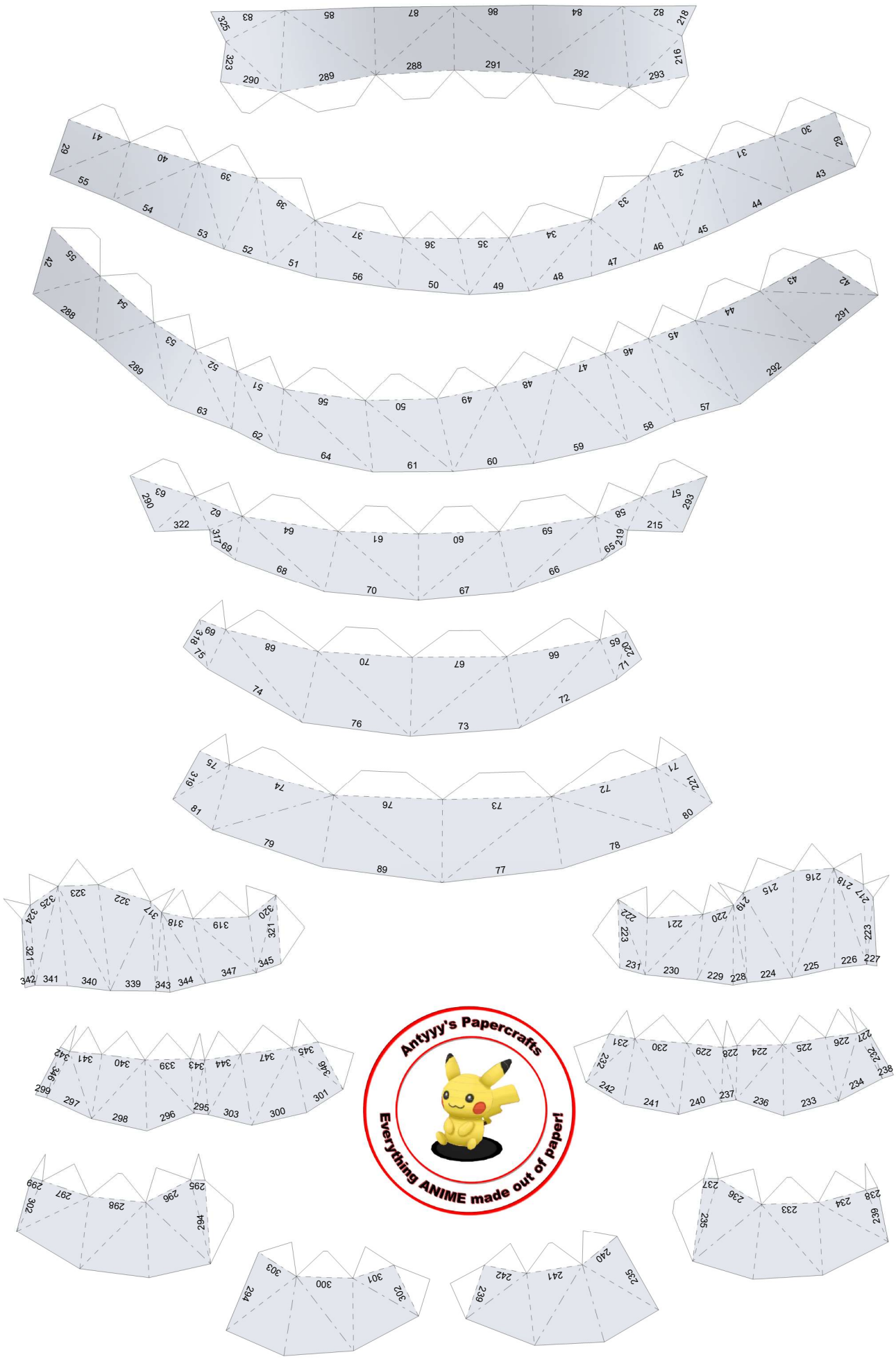
Antyyy's Papercrafts
Everything ANIME made out of paper!

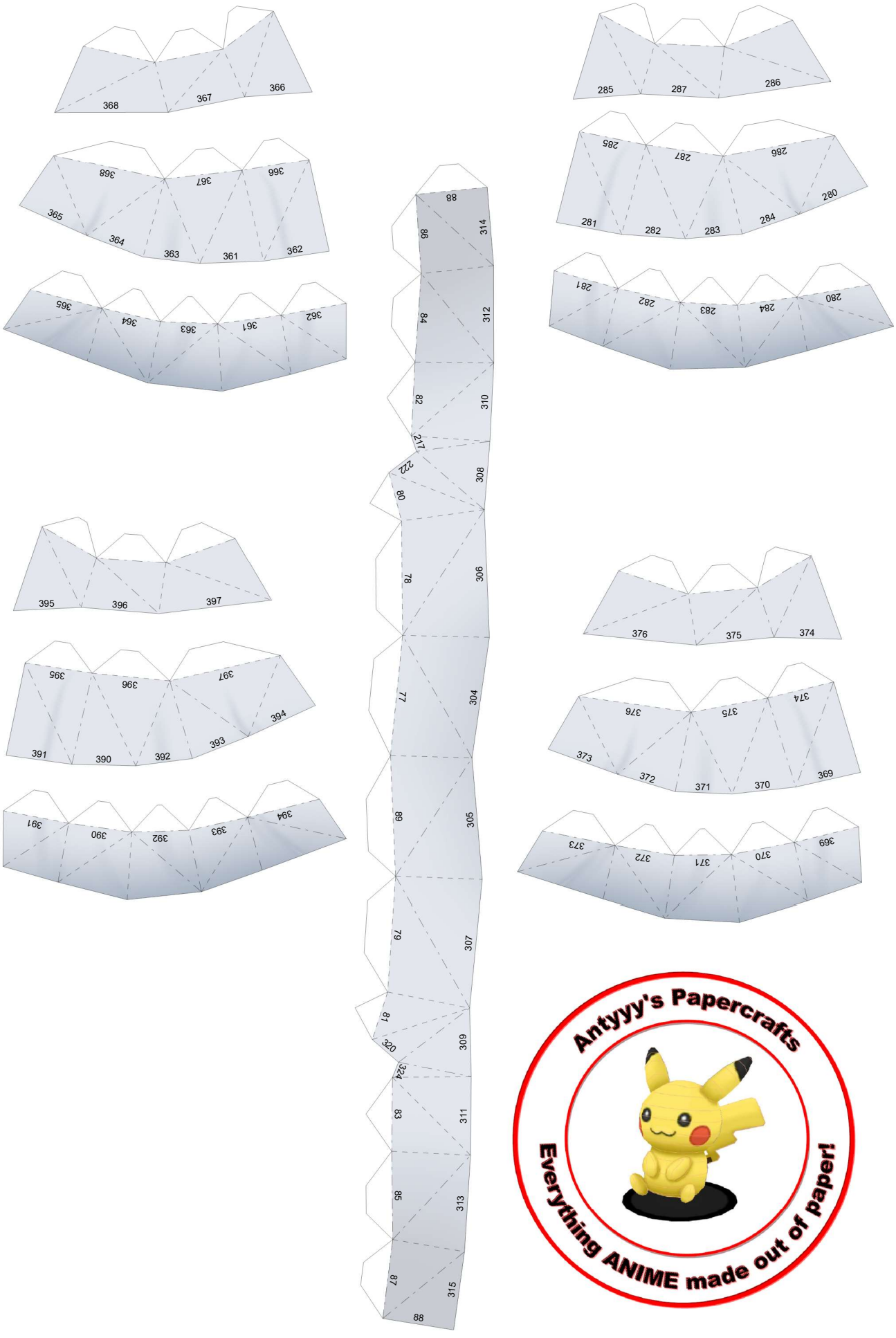
368
367
366
365
364
363
361
362
285
287
286
281
282
283
284
280
88
98
314
84
312
82
310
217
222
308
80
78
306
77
304
68
305
79
307
81
320
309
324
83
311
86
313
87
315
88
395
396
397
391
390
392
393
394
376
375
374
373
372
371
370
369
Antyyy's Papercrafts
Everything ANIME made out of paper!

4/8 (row2 col1)


316
314
336
312
334
310
332
308
330
306
328
304
326
305
327
307
329
309
331
311
333
313
335
315
337
316
336
338
334
332
330
328
326
327
377
378
329
380
331
382
333
384
335
386
337
389
338
388
385
383
381
379
387
388
385
431
383
428
381
426
379
424
377
422
420
378
421
380
423
382
425
384
427
386
429
389
432
387
Antyyy's Papercrafts
Everything ANIME made out of paper!

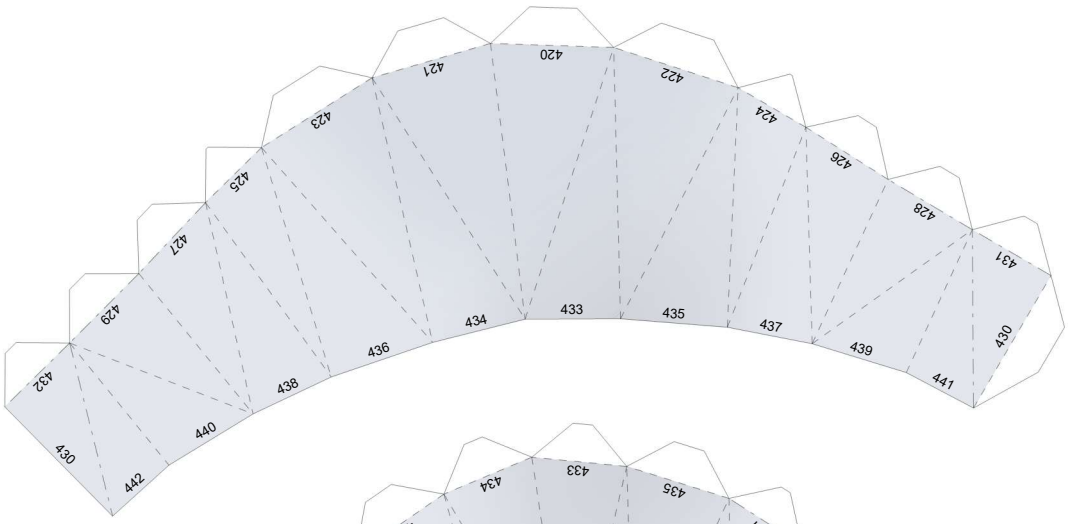
420
421
422
423
424
425
426
427
428
429
430
431
432
433
434
435
436
437
438
439
440
441
442

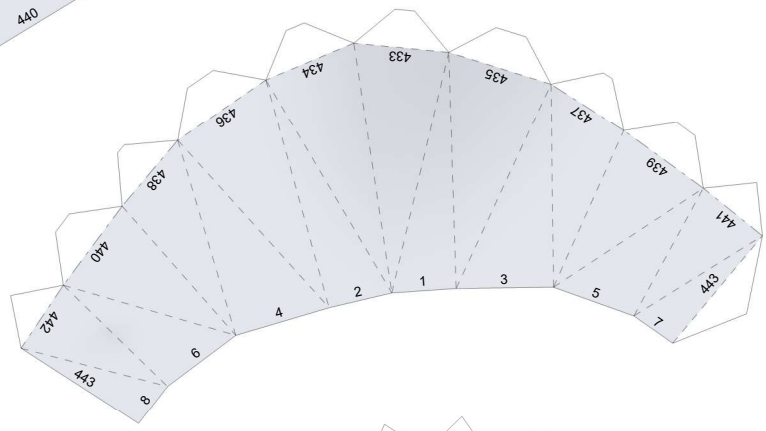
433
434
435
436
437
438
439
440
441
442
443
1
2
3
4
5
6
7
8
9

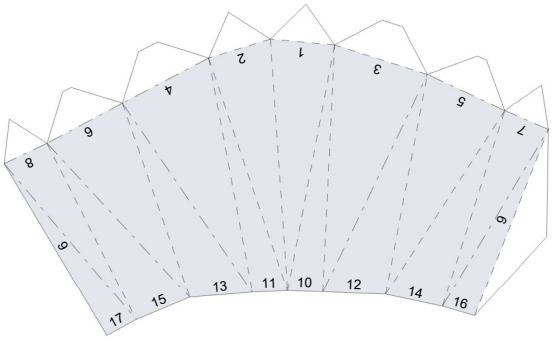
1
2
3
4
5
6
7
8
9
10
11
12
13
14
15
16
17

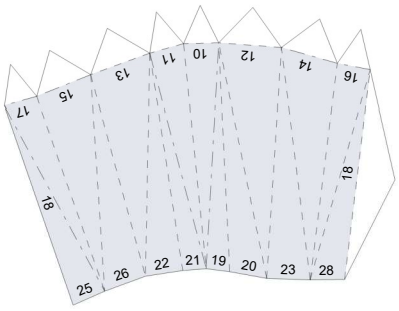
10
11
12
13
14
15
16
17
18
19
20
21
22
23
25
26
28


Antyyy's Papercrafts
Everything ANIME made out of paper!

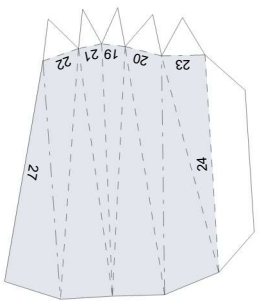
19
20
21
22
23
24
27

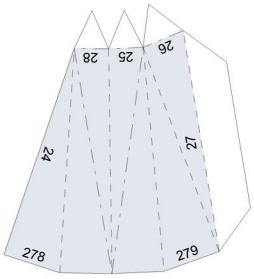
24
25
26
27
28
278
279

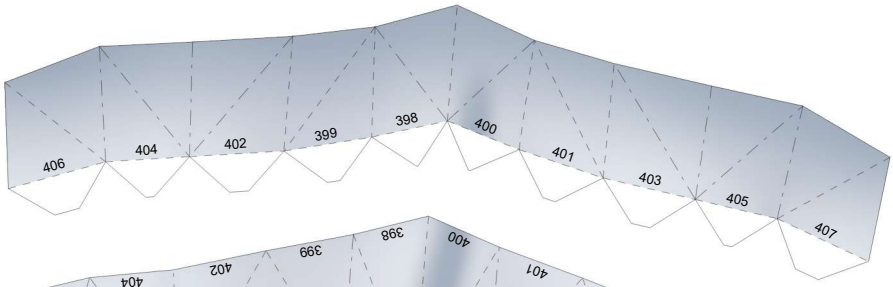
406
404
402
399
398
400
401
403
405
407

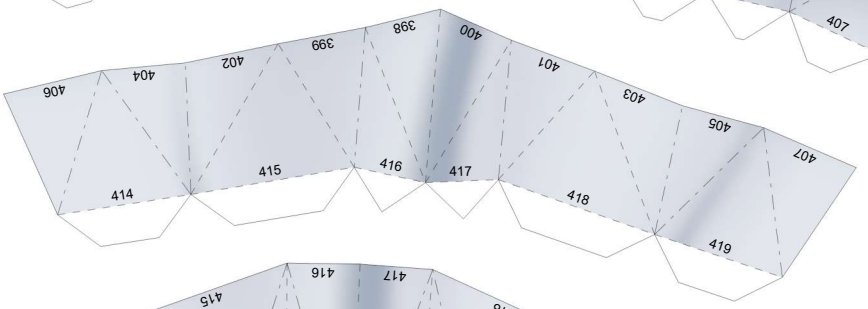
406
404
402
399
398
400
401
403
406
407
414
415
416
417
418
419

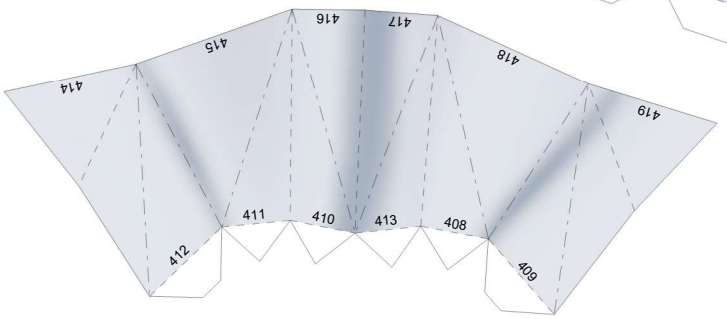
414
415
416
417
418
419
412
411
410
413
408
409

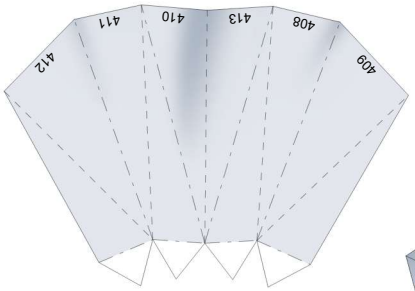
412
411
410
413
408
409

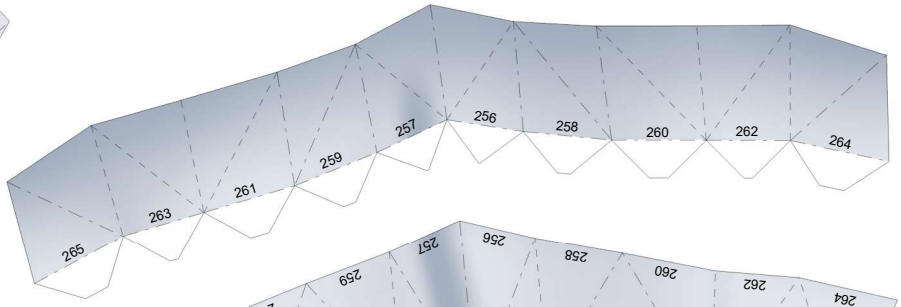
265
263
261
259
257
256
258
260
262
264

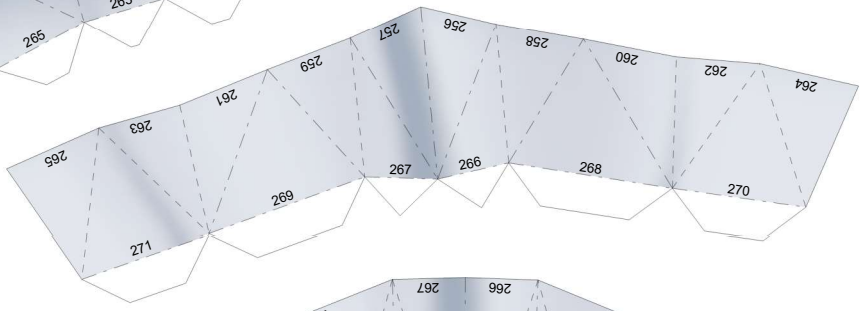
265
263
261
259
257
256
258
260
262
264
271
269
267
266
268
270

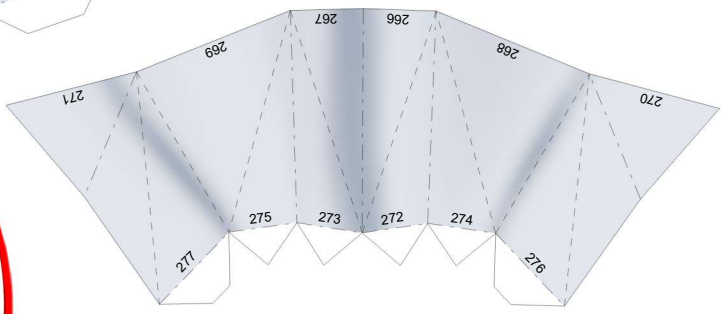
271
269
267
266
268
270
277
275
273
272
274
276

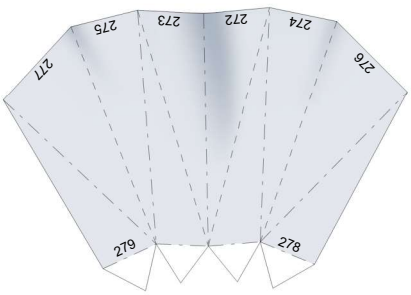
277
275
273
272
274
276
279
278


Antyyy's Papercrafts
Everything ANIME made out of paper!



DeviantArt

https://www.deviantart.com/antyyy/

Facebook

https://www.facebook.com/antyyyspapercrafts/

Ko-fi

https://ko-fi.com/antyyyspapercrafts

Patreon

https://www.patreon.com/antyyyspapercrafts/

Pixiv

https://www.pixiv.net/en/users/12367064